EDR除盐装置
EDR Demineralizer

一、概况
I General description

淡化水一般指将高含盐量的水经过除盐处理后，变成能满足生产和生活饮用的淡水。因为是部分除盐，故称之为淡化。

给水淡化处理中最常用的方法有：电渗析法，反渗透法，离子交换法等，而电渗析法在海水和苦咸水淡化或初级除盐中，既能制取满足生产和生活用水要求，而且设备简单，运行管理方便，因此备受推广使用。





Desalted water refers generally to the fresh water which meets the requirements of production and becomes drinkable after the desalting treatment of high-salinity water. However, the so called fresh water is by no means completely free of salt.

Methods that are commonly used for desalting process include electrodialysis method, reverse osmosis process, and ion exchange method, of which the electrodialysis method not only prepares the water that meets the requirements of production and becomes drinkable after desalting process or preliminary desalting process of seawater and caustic soda water, but also requires simple equipment to be operated through convenient management, thus being widely popularized for use.

二、工作原理
II How it works

EDR除盐装置是利用离子交换膜对溶液中阴阳离子的选择透过性，以直流电场为推动力的膜分离方法，它是使溶质和溶液分离的一种物理化学过程。

EDR Demineralizer separation method is a sort of physical and chemical process to separate solute from solution, of which the process is based on the principle that the ion exchange membrane is of selective permeability to the cations and anions in solution, where direct-current electric field plays a role of impetus.

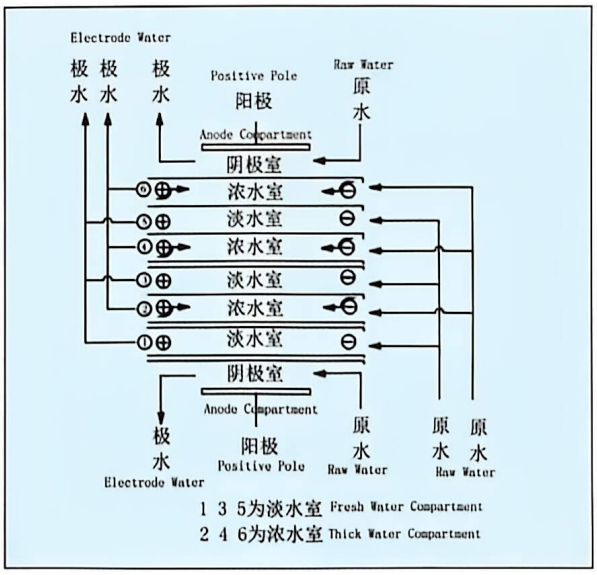

EDR除盐装置工作原理图

EDR Demineralizer's Working Principle Diagram

三、工艺选择及原水预处理说明

III Technological selection and raw water pretreatment

EDR除盐装置是脱盐工艺中的一个单元，可与其他脱盐技术配合，达到理想的目的。几种除盐装置脱盐工艺如下：

1、原水→预处理→除盐装置→脱盐水；这是制取工业用脱盐水或初级纯水的简单工艺。

2、原水→预处理→除盐装置→消毒→脱盐水；由海水，苦咸水制取饮用水或从自来水制取食品，饮料用水可采取此工艺。

3、原水→预处理→除盐装置→离子交换→脱盐水；此工艺用于制取纯水或高纯水。除盐装置首先将水中含盐量去除80%-90%，剩余的少量盐由离子交换树脂去除，这样可以大大减轻离子交换的负担，从而可以减少酸，碱的用量，利于环境保护。此工艺应用最为广泛。

4、原水→预处理→软化→除盐装置→脱盐水；此工艺适用于处理高硬度，高硫酸盐水，或低硬度苦碱水（可用浓水作软化再生剂）。

5、其他：还可以与反渗透，超滤相配合，制取医药，电子工业用水。

工艺中的预处理是为满足除盐装置进水要求，预处理的目的是去除水中的机械杂质，悬浮物，胶体物质，有机物质，微生物，藻类和细菌以及某些对离子交换膜产生毒害作用的物质（如Fe、Mn、H_2S、游离氯等）。水中的机械杂质、悬浮物质极易在除盐装置内沉淀，造成水流不畅；有机物质，悬浮物质，微生物，藻类，细菌极易沉淀或被吸附在膜的表面并深入膜内，造成膜的污染；水中有害重金属离子（如Fe^{3+}、Mn^{4+}等）能与膜结合，使膜中毒；水中氧化还原物质或有害气体（H_2S、游离氯等）也会对膜产生氧化，分解或其他作用。以上这些现象如若发生，将会使除盐装置的水流阻力增加，膜堆电阻增大或使膜破损，导致工作电压上升，工作电流下降，产水量降低，脱盐率下降，电耗增加或浓淡水串流，从而除盐装置处于极为恶劣的运行状况，此时不得不进行频繁的酸洗，甚至解体清洗或解体换膜。以此可见，为保证除盐装置的安全稳定运行，原水预处理非常必要。预处理方法视原水水质而定。深井水一般水质透明，悬浮物较少，采用简单的过滤和精密过滤即可。但地下水硬度高或含Fe、Mn，则需采用软化，除Fe、Mn措施。自来水常含有微量的悬浮物质，有机物和游离氯，采用过滤和活化性炭吸附过滤是必要的。如采用地面水为水源，一般需采用混凝沉淀或微絮凝或加氯再过滤，活性炭和精密过滤等方法。但不论采用何种水源水，在除盐装置前设置孔径为5-25um的精密过滤器作为保安过滤器是必要的，它可以使除盐装置免受各种杂质的影响，以保证其正常工作。

原水经预处理后应符合除盐装置进水水质指标，除盐装置技术国家标准规定：水温5-40℃；耗氧量（$KMnO_4$）<3mg/L，游离氯<0.1mg/L，铁<3mg/L，锰<0.1mg/L，浊度<3mg/L。

EDR Demineralizer is one of the procedures in the desalting process, which may work together with other desalting technologies to achieve an ideal result. Listed below are a number of demineralizer desalting

1 Raw water → pretreatment →demineralizer → desalted water. This is a simple technology to prepare desalted water for industrial use or to prepare primary pure water.

2 Raw water → pretreatment → demineralizer → disinfection → desalted water, a technology that may be adopted to prepare drinkable water from seawater and caustic soda water, or may be adopted to prepare, from tap water, water for food and beverage process.

3 Raw water → pretreatment → demineralizer → ion exchange → desalted water, a technology that may be used to prepare pure water or high-purity water. Demineralizer can remove 80 to 90 percent of the salt out of the water, and the remaining small amount of salinity is then to be removed by ion exchange resin. This technology can reduce enormous work of ion exchange, thus cutting down on the consumption of acid and alkali, and thus facilitating environmental protection. So it is most widely accepted.

4 Raw water → pretreatment → softening → demineralizer → desalted water. This technology is applicable to the treatment of hard and high sulfate water, or applicable to the treatment of caustic soda water with low hardness (concentrated water to be used as softening agent for regeneration)..

5 Other technological methods include coordination with reverse osmosis and ultra-filtration to prepare water to be used in pharmaceutical and electronic sectors.

Pretreatment process is so required to meet the requirements of feeding water for demineralizer. The purpose of pretreatment is to remove those undesirable matters in the water, including the mechanical impurities suspended solids, colloidal substances, organic matters, microorganism, algae, bacteria, and some other substances, such as Fe, Mn, H_2S, free chlorine, etc., that may bring toxic action to the water to be produced by ion exchange membrane. In addition, the mechanical impurities and suspended substances in the water are easy to precipitate inside the demineralizer, thus causing flow retarding, and organic matters, suspended solids, microorganism, algae and bacteria are easy to precipitate, or to be adsorbed onto the surface of membrane and penetrate into the membrane as well, thus polluting the membrane. Furthermore, the harmful heavy metal ions in the water, such as Fe^{3+} and Mn^{4+} , can combine with the membrane and consequently bring poisoning to the membrane. And the redox substances or harmful gases in the water, such H_2S and free chlorine, can also cause such effect as oxidation and decomposition to the membrane. If the above phenomenon occurs, it will increase the flow resistance of demineralizer, increase the resistance of membrane stack or cause damage to the membrane. And it may also lead to rise of the operating voltage, decline of the operating current, decline of the water yield, decline of the desalting rate, increase of the power consumption or mixing thick and fresh water together, thus bringing the demineralizer into a very bad running state. If so, frequent acid pickling or even thorough cleaning and membrane change shall be required. Thus it can be seen that in order to ensure a safe and stable demineralizer operation, raw water pretreatment is absolutely necessary. As for the specific pretreatment option, it may depend on the quality of the raw water. As for the deep well water of being relatively transparent with less suspended matters, simple filtering method and secondary filter shall be acceptable. However, as for the hard underground water containing Fe, Mn, softening process shall be required for adoption plus measures to remove Fe and Mn. As for the tap water containing traces of suspended matters, organic matters and free chlorine, filtration and filtering through activated charcoal adsorption shall become necessary. If the water source is surface water, it is generally required to adopt the methods of coagulating precipitation, micro-flocculation, chlorine-adding filtration, activated carbon filtration and secondary filtration etc. No matter what kind of source water may be used, it shall be necessary to set, in front of the demineralizer, a precision filter with 5-25um bore diameter as the guarding filter. Such a guarding filter can keep the demineralizer free from the effects of various impurities so as to ensure a normal operation.

The pretreated raw water shall conform to the quality indexes required for the water feeding the demineralizer, and accord with the stipulations of the national standard for demineralizer technology: water temperature kept at 5 to 40℃, oxygen consumption ($KMnO_4$) <3mg/L, free chlorine <0.1mg/L, iron (Fe^{3+})<3mg/L, manganese (Mn^{4+})<0.1mg/L, turbidity <3mg/L.

四、EDR除盐装置规格及设计技术参数

IV EDR Demineralizer specifications, design and technical parameters

序号 Serial No.	型号 Model	规格 Specifications (mm)	产水量 Water yield (t/h)	脱盐率 Salt removing rate (%)	外型尺寸 External dimensions (mm)	进水管 Water inlet (DN)	整机重 Overall weight (Kg)
1	DS3×3-180	200×600×0.9	0.50	90	1000×1200×1600	25	300
2	DS3×6-240	200×600×0.9	0.50	95	1000×1200×1600	25	330
3	DS3×3-200	320×800×0.9	1-1.5	90	1100×1500×1600	32	450
4	DS3×3-240	400×800×0.9	2-2.5	90	1300×680×1200	40	500
5	DS3×3-300	400×800×0.9	2.5-3	90	1300×680×1200	40	580
6	DS3×6-300	400×800×0.9	3-3.5	95	1300×680×1200	40	580
7	DS3×6-360	400×800×0.9	3.5-4	95	1300×680×1380	40	640
8	DS3×3-240	400×1600×0.9	5-8	80	2250×850×1100	50	1884
9	DS3×3-300	400×1600×0.9	8-10	80	2250×850×1200	50	1960
10	DS3×6-300	400×1600×0.9	7-9	85	2250×850×1200	50	1979
11	DS3×6-420	400×1600×0.9	8-10	85	2250×850×1500	50	2123
12	DS3×3-300	800×1600×0.9	18-20	70	2250×940×1400	65	3790
13	DS3×6-380	800×1600×0.9	10-20	75	2250×940×1550	65	3923
14	DS3×3-420	800×1600×0.9	26-30	70	2250×940×1650	65	4022

耗电量与脱盐率关系经验数据
Empirical data related to power consumption and salt rejection

处理水 Water to be treated	脱盐范围 Desalination range (mg/l)		耗电量 (KW·h/m³淡水) Power consumption (KW•h/m³ fresh water)
	原水 Raw water	淡水 Fresh water	
海水 Seawater	35000	500	12-16
苦咸水 Brackish water	10000-30000	500	5-10
苦咸水 Brackish water	1000-10000	500	0.3-0.5
自来水 Tap water	500-1000	200-500	0.3-0.5
自来水 Tap water	500	20-50	0.1-0.3

极限电流时的膜对电压经验数值 Empirical value for membrane pair voltage in case of limited current			
用途 Application	进水含盐量 Salinity of feed water	膜对电压（V/对） Membrane pair voltage（V/pair）	
	范围 Range（mg/l）	0.5–1mm厚 thick	1–2mm厚 thick
苦咸水淡化 Brackish water desalination	5000–2000	0.3–0.6V	0.6–1.2V
	2000–500	0.4–0.8V	0.8–1.6V
苦咸水 Brackish water	500–100	0.6–1.2V	1–2V

不同含盐量时选取电流密度的经验数值 Empirical value of electric current density to be selected for water with various salinities			
进水含盐量 Salinity of feed water	100–500	500–2000	2000–5000
电流密度 Electric current density	0.2–0.5	1–3	3–10

五、EDR除盐装置的运行

V EDR Demineralizer operation

1、EDR除盐装置设备稳定运行的措施：

（1）控制工作电流：一般工作电流低于极限电流。

（2）倒换电极：可以有效地减轻膜及阴极上的水垢。一般水垢往往沉积在浓水室的阴极表面上，倒换电极后，浓水室，淡水室也相应倒换，造成水垢的不稳定状态，因而可以减轻结垢。

（3）酸洗：是消除沉淀的有限方法，水垢积到一定程度，就需要进行酸洗，酸洗周期是根据除盐率下降的具体情况而定，一般1–4周一次，一般采用盐酸，酸液浓度1–2%，不宜过高，若浓度大于3%，会使离子交换膜受损，酸洗一般采用循环酸洗，浓水，淡水和极水室一次酸洗的方法。酸洗时间一般1–2小时或酸洗到进出EDR除盐装置的酸洗液PH值不变为止。酸洗后用清水冲洗到进出水的PH相等为止。对于硫酸钙沉淀，可先用10%浓度的碳酸钠溶液清洗后，再酸洗。

（4）碱性：酸洗不能去除有机沉淀物，对于这类污染层可以用碱性食盐水清洗，使有机物消除，碱洗液一般由9%NaCl（最好用精盐）和NaOH组成，碱性时间30–90分钟，结束后用清水冲洗到合格为止。碱洗可以利用酸洗系统进行，一般不必另设装置。

（5）定期拆洗：采用上述方法不能恢复除盐率时，应把EDR除盐装置拆开清洗，重新组装一般1–1.5年EDR除盐装置需要拆洗一次。

2、EDR除盐装置运行操作要点：

（1）设备启动时，应先通水后通电，停水时，应先停电后停水，浓水，淡水和极水的各阀门应做到同时缓慢启闭，并使压力接近，通电时，EDR除盐装置电压应逐步升高，直至电流值稳定在工作电流时为止。

（2）运行期间，定时监测并记录EDR除盐装置的各次运行参数。

（3）倒换电极时，先停电排水，然后缓慢倒换浓水，淡水和极水阀门，待正常后再通电，收水，当整流器可直接倒换电极时，则应先开淡水排放阀，而后倒极，正常后收水。

（4）EDR除盐装置停运时，应保持膜堆处于湿润状态，以防离子膜干燥收缩变形。

1 Measures for stable operation of EDR Demineralizer equipment

(1) Operating current control: As a general rule, the operating current shall be lower than the limited current.

(2) Electrode rearrangement: Electrode rearrangement can effectively alleviate incrustations onto the membrane and the negative pole. Incrustations tend to precipitate onto the surface of cathode of the concentrated water compartment. After electrode rotation, rearrangement of the concentrated water compartment and the fresh water compartment shall also be handled correspondingly, thus causing an unstable incrustation state and alleviating incrustation.

(3) Acid pickling: Acid pickling is an effective method to eliminate precipitates. Incrustations, accumulated to a certain extent, shall need to be acid cleaned. The general frequency of acid pickling, depending upon the specific circumstances of desalination rate decline, shall be once every 1 to 4 weeks. It shall be cleaned with hydrochloric acid, and the acid strength shall be controlled within 1-2%. If the acid strength exceeds 3%, it will bring damage to the ion exchange membrane. The common method for acid pickling is circulating acid cleaning with thick water, fresh water and electrode water. It shall be washed for 1 to 2 hours, or till the time when the PH value of the pickling solution, that flows in and out through the EDR Demineralizer, remains unchanged. Following acid pickling, use clean water to wash till the time when the PH value of inflow water and outflow water sustains equal. As for calcium sulfate precipitates, 10% concentration of sodium carbonate solution shall be firstly suggested for washing and acid cleaning afterwards.

(4) Alkali wash: The organic sediments, that cannot be removed through acid pickling, can be eliminated through washing by alkaline saline solution. The Alkali wash solution is composed generally of 9% NaCl and NaOH (It is better to use refined salt.). Such washing shall last for 30-90 minutes, and clean water wash is needed afterwards. Alkali wash can be carried out through the same system to be used for acid pickling.

(5) Regular unpick and wash: If the above methods fail to restore desalination rate, unpick and wash shall be suggested for the EDR Demineralizer. In a general way, unpick and wash is needed for a frequency of once a year, or once every one and a half years.

2 Main points for EDR Demineralizer operation

(1) To start the equipment, turn on the water tap to be followed by power supply. And to stop the equipment, power cut shall be required before water cut. The valves of thick water, fresh water and electrode water shall be on and off synchronously under nearly the same pressure. When power is on, the voltage shall rise in a gradual escalation till the time when the current value stabilizes in a state of operating current.

(2) During the operation, regular monitoring shall be required and operating parameters of the EDR Demineralizer shall be recorded.

(3) When electrode rotation is required, cut off power first to drain away water, and then slowly rotate the valves of thick water, fresh water and electrode water. No power connection and water collection shall be allowed until the time when everything is in a normal state. Once the rectifier allows a direct electrode reverse, the discharge valve of fresh water shall be opened first to be followed by electrode reverse. When everything becomes normal, water collection shall be allowed.

(4) When the EDR Demineralizer stops operation, the membrane shall be kept moist so as to avoid shrinkage deformation.

六、常见故障及原因分析

故障现象	造成影响	原因分析
设备漏水	1、流量不高 2、溶液漏损 3、漏电	1、因隔板或膜厚薄不均匀而引起压不紧 2、隔板表面不平整，波浪形 3、组装时异物夹着或膜堆比整齐
设备变形部分 膜堆凹进凸出	1、漏水 2、影响水流分布引起极化 和电流效率下降	1、隔板收缩变形 2、突然开泵或停水的冲击 3、停用时关闭阀门太快引起虹吸现象使设备内部产生真空 4、隔板或膜厚薄不均匀组装时不整齐或缩紧时用力不均匀
机械杂质堵塞在隔板进出水孔配集水槽和流水道中有泥杂等杂质	1、水流阻力升高流量逐步降低 2、水流分配不均匀，极限电流值低，除盐效率下降	1、预处理不力，预处理设备不足或操作不妥 2、铁质和有机物污染 3、定期酸洗或碱洗洗不够
膜破损或膜起泡	浓淡水或极水互漏， 影响除盐效率	1、阳极反应产物Cl_2，O_2等氧化作用 2、膜两侧的水流压差过大或突然开泵停泵 3、膜上水垢沉淀影响 4、膜干裂，冻坏或温度过高 5、酸洗液浓度过高
水垢沉淀	1、出水水质下降 2、流量下降 3、电流效率下降 4、电阻增加 5、严重时设备不能工作	1、操作电压过高，超极限电流运行 2、水流分配不均匀 3、杂物堵塞
浓，淡水或极水间互漏	1、浓水流到淡水室影响水质 2、淡水流到浓水室影响水质	1、浓淡极水压力不均匀 2、配集水槽处不平整 3、膜破裂 4、膜上进出水孔和隔板配极水槽结构不合理或组装出错
膜发生胀缩尺寸不稳定， 通常是阳膜缩短阴膜膨涨	1、膜孔和隔板孔不齐 2、影响水流畅通 3、造成漏水	1、膜浸泡时间不足 2、溶液浓度变化较大 3、膜短者可在烯酸或纯水中涨大，长者可在一定浓度盐水中缩短
污染膜表面颜色变棕褐色	1、电流增大 2、水流阻力增大 3、脱盐率下降	1、极化沉淀 2、有机物或膜污染中毒，可用10%的氯化钠，2%的氢氧化钠溶液洗涤